Glastender®

A family company manufacturing in the USA

www.glastender.com

Project: _____	AIA#
Item #: _____ Qty: _____	SIS#
Model #: _____	

Keg Coolers
Two, Three and Four Keg
Self-Contained

KC60L-BS(LR)

KC__ _-_ S(___)

- **Size:** 60 = 60" Two Keg; 72 = 72" Three Keg; 84 = 84" Four Keg
- **Refrig. Compartment:** L = Left or R = Right
- **Door Style:** B = Black vinyl-clad; S = Stainless
- **Top Style:** S = Stainless
- **Door Hinge Location†:** (from left to right) L = Left or R = Right

† Specify hinge location for each door

4004503
Conforms to NSF/ANSI STD 7 and UL STD 471
Certified to CSA STD C22.2 No. 120
Meets NSF 7 requirements for closed container products

Intertek

Intertek

Standard Features

- Galvanized steel interior with stainless steel floor
- Stainless steel keg racks and 1/2″ thick high impact polypropylene threshold scuff plate
- Stainless steel finished top
- Stainless steel draft beer tower and drain pan - 2-faucet column (KC60), 3-faucet column (KC72), 4-faucet tee (KC84)
- Locking doors
- Evaporator above compressor compartment to maximize storage capacity
- Recessed compressor compartment back and 90° electrical plug enables flush wall placement
- Easy to remove condenser filter can be regularly cleaned to maintain condenser coil efficiency
- 180° swinging doors
- Leg sockets recessed into base

Specifications

Electrical
- 120V, 1 phase, 60 Hz
- Full load amps - 5.7
- Dedicated 15 amp circuit is required
- Includes a 6 foot NEMA 5-15P grounded cord and plug which exits the back of refrigeration compartment

5-15P

Refrigeration
- R134a
- Compressor - 1/4 HP
- Heat rejection - 2334 BTU/Hr
- *Operating Range*
- 34°F (1°C) to 40°F (4°C)

Plumbing
- Automatic condensate evaporator. No drain connection required
- 1/2″ tailpiece provided on drain pan and pre-plumbed drain line which exits out bottom front of refrigeration compartment

Materials
- Stainless steel parts include: interior floor, evaporator cover, front of cabinet, hinges, hinge and lock brackets, and optional legs
- Black vinyl-clad steel parts include: standard sides, doors, and compressor cover
- Galvanized steel parts include: interior walls and ceiling, exterior sub-top, back and bottom
- Zinc plated CR steel parts include: leg sockets

Capacities	*KC60*	*KC72*	*KC84*
• 1/2 barrels	2	3	4
• 1/4 barrels	2	3	4
• 1/6 barrels*	8	11	14

*Consult factory for different tower options.

Glastender, Inc. • 5400 N Michigan Rd • Saginaw, MI • 48604-9780
989.752.4275 • 800.748.0423 • Fax 989.752.4444
www.glastender.com

Specifications subject to change without notice. For current specifications please visit our website.

Approval/Notes:

Self-Contained Keg Coolers

Dimensional Information

KC60

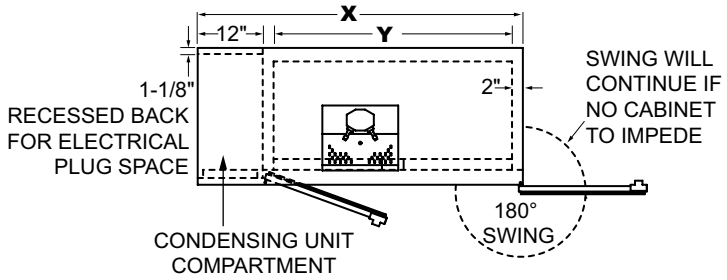

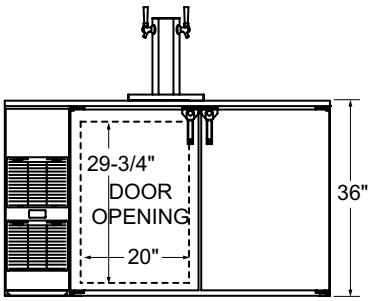

KC72

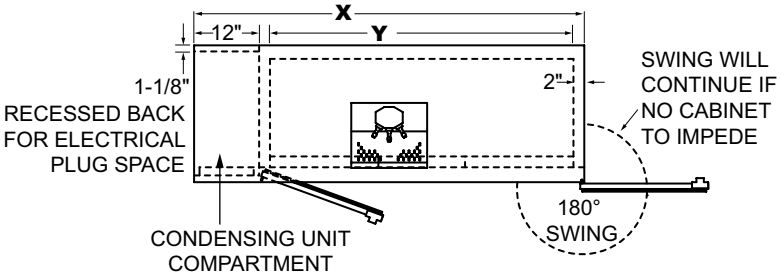

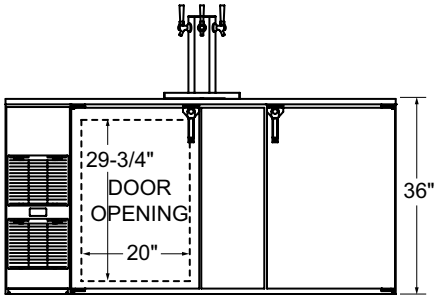

KC84

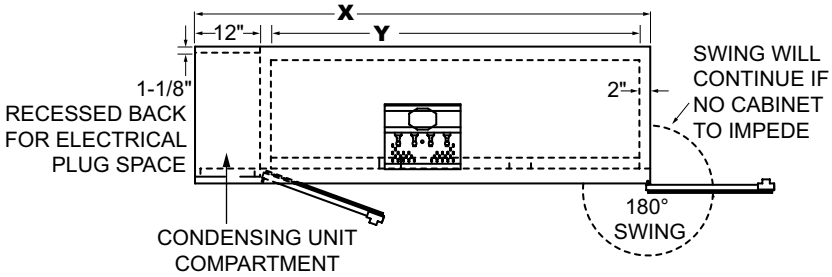

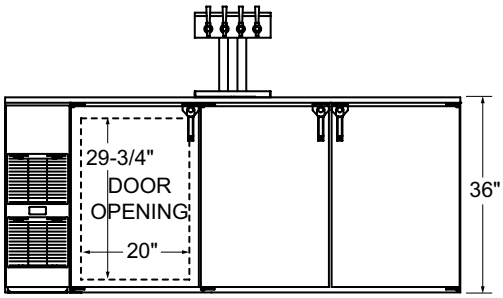

Typical Side View

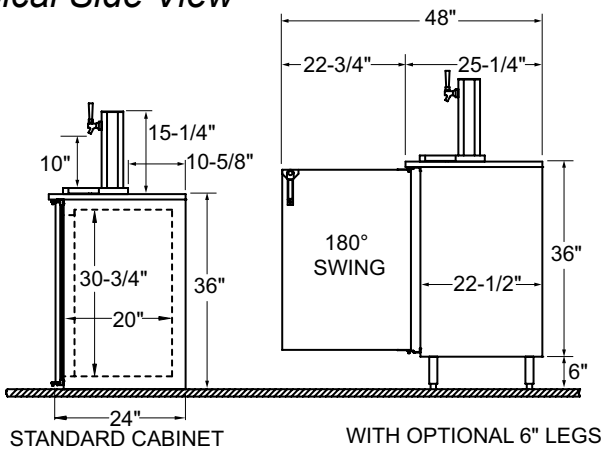

Note: Available with compressor left or right. Compressor left model shown. Use Model Number Key to specify location when ordering.

Glastender®
5400 N Michigan Rd • Saginaw, MI • 48604-9780
989.752.4275 • 800.748.0423 • Fax 989.752.4444
www.glastender.com

Printed in USA