Glastender®

A family company manufacturing in the USA

www.glastender.com

Project: _____	AIA#
Item #: _____ Qty: _____	SIS#
Model #: _____	

66" x 26" Complete Style Cocktail Station

CS-66x26-CW or CS-66x26-CCW

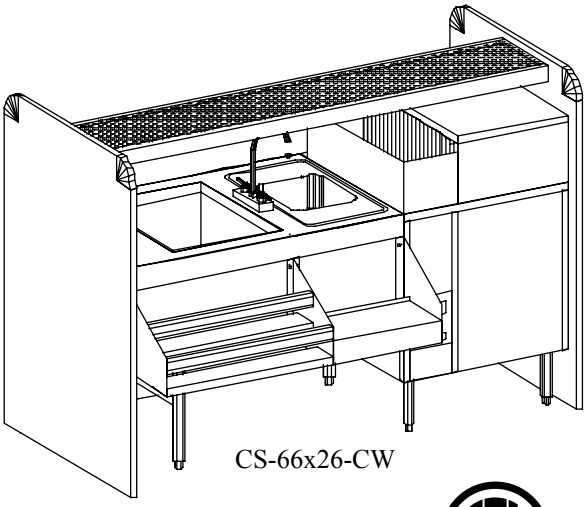

CS-66x26-CW

NOTE: Cocktail stations can be ordered without the laminated front and end panels for customers who wish to provide their own. Add the suffix '-S' in the model number when ordering.

Intertek
4004503
Conforms to NSF/ANSI STD 2
Certified to CSA STD B45.4

Standard Features

- GT-24 rotary glasswasher - specify when ordering: *voltage* - 120/208V or 120/240V, 1 phase, 60Hz
- Pass thru ice bin - capacity 85#
- Wet waste sink with strainer - dimensions: 9-1/4″ by 11-1/2″ by 6″ deep
- Gooseneck faucet
- Stainless steel draining shelf with removable perforated inserts
- Tubing chase - dimensions: 4″ by 8″ by 6-1/2″ high
- Double speed rail - dimensions: 24″ long by 10″ deep - capacity: 12 bottles
- Blender shelf - dimensions: 16″ long by 10″ deep
- Laminated wooden front and end panels, specify laminate manufacturer, color, and catalog number when ordering (Conversion to stainless steel front and end panels is available)
- Available in clockwise or counterclockwise rotation

To view underbar installation instructions, please visit: http://www.glastender.com/PDF/F-750-165_Underbar_Installation_Instructions.pdf
To view cleaning and care instructions, please visit: http://www.glastender.com/PDF/F-423-011_ss_clean_care.pdf

Specifications

GT-24 Glasswasher
- See GT-24 Glasswasher spec sheet, page 1.01 of the Specification Guide

Ice Bin
- 16″ by 20-1/2″ by 10-1/2″ deep

Sink Bowl
- 9-1/4″ by 11-1/2″ by 6″ deep

Tubing Chase
- 4″ by 8″ by 6-1/2″ high

Sneeze Guard (optional)
- 17-1/4″ by 21-1/2″ by 10″ high

Ice Bin Drain
- Standard model...1-1/2″ tailpiece
- Ten circuit cold plate models...1/2″ MPT

Sink Drain
- 1-1/2″ I.P.S.

Tray and Overshelf (optional) Drains
- 1/2″ tailpiece

Faucet
- On 4″ centers, accepts 3/8″ sink leads, hot and cold water connections required

Cold Plate
- Ten circuit available

Shelf Heights
- Tray shelf...44″
- Single overshelf (optional)...69″
- Double overshelf (optional)...63″ and 72″

Rotation
- Ice bin can be at bartender's left (clockwise) or right (counterclockwise) - specify when ordering

Materials
- 20 and 22 gauge stainless steel parts include: glasswasher cabinet
- 20 gauge stainless steel parts include: tray shelf and inserts, tubing chase, work surface, blender shelf, double speed rail steps, bowl, and ice bin (Stainless front and end panels if specified)
- 18 gauge stainless steel parts include: glasswasher floor and tank, leg set cross braces, and leg pads
- 16 gauge stainless steel parts include: leg mounting brackets and legs
- 14 gauge stainless steel parts include: blender shelf ends and double speed rail ends
- Laminated wooden front and end panels
- 1/4″ clear acrylic sneeze guard (optional)
- Conveyor is electropolished, welded stainless steel wire

Recommendations
- Provide 12″ by 12″ open floor drain (safe waste) under ice bin - consult local codes
- Provide 120V, 20 AMP, four-plex electrical outlet below ice bin for appliances such as blenders, carbonators, dispensers, etc.

All faucets are NSF/ANSI 61, Annex G low lead compliant

Glastender, Inc. • 5400 North Michigan Road • Saginaw, MI • 48604-9780
989.752.4275 • 800.748.0423 • Fax 989.752.4444
www.glastender.com

Approval/Notes:

Specifications subject to change without notice. For current specifications please visit our website.

CS-66x26 Cocktail Station

Dimensional Information

CS-66x26-CW
(Clockwise Rotation)

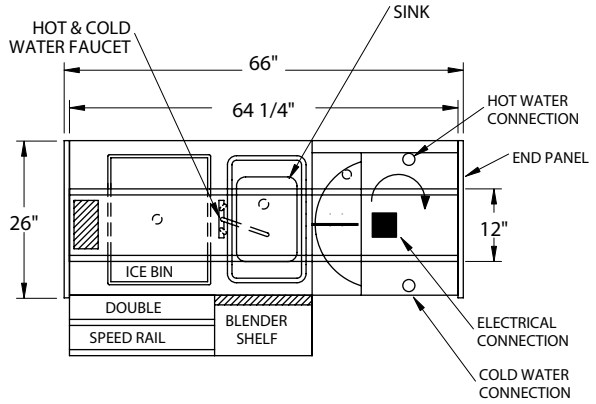

BARTENDER SIDE

PLAN VIEW

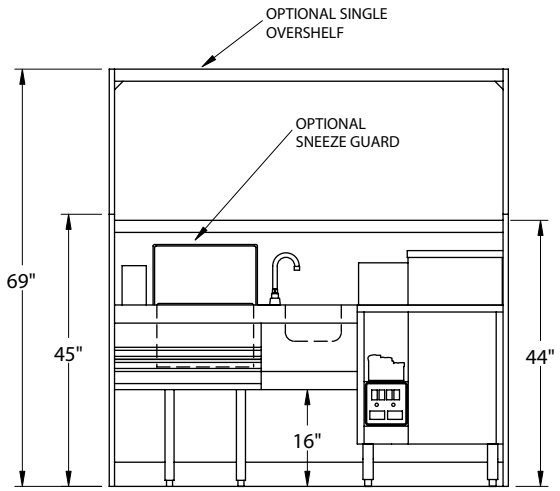

BARTENDER SIDE ELEVATION

CS-66x26-CCW
(Counterclockwise Rotation)

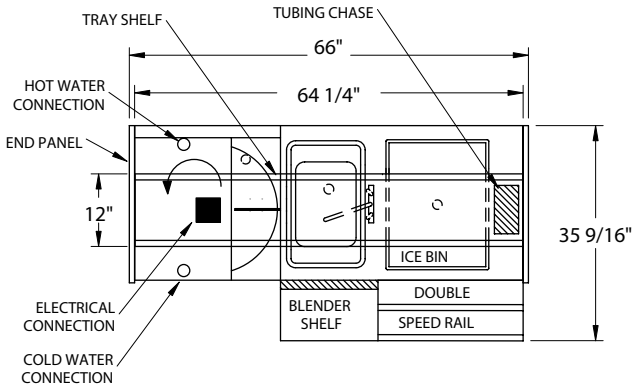

BARTENDER SIDE

PLAN VIEW

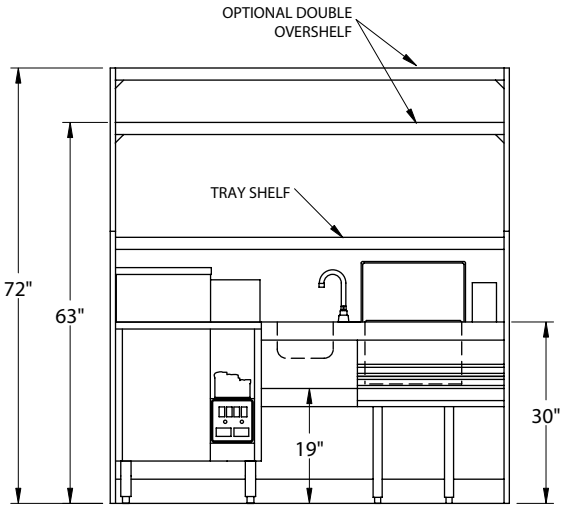

BARTENDER SIDE ELEVATION

OPTIONAL ACCESSORIES

Model	Description	Model	Description
CPS-66x26	Convert laminated panels to stainless	CCD/T	Clip-on condiment dispenser
02000624	Ten-circuit sealed cold plate	03000508	Sneeze guard
SOS/SS-66	Stainless steel single overshelf	CSR-16	Clip-on single speed rail
DOS/SS-66	Stainless steel double overshelf	CDSR-16	Clip-on double speed rail
IBD-H-CS26	Ice bin divider, half	CDRY	Clip-on dry waste, stainless steel

Glastender®
5400 North Michigan Road • Saginaw, MI • 48604-9780
989.752.4275 • 800.748.0423 • Fax 989.752.4444
www.glastender.com

Printed in USA