Glastender®

A family company manufacturing in the USA

www.glastender.com

Project: _____	AIA#
Item #: _____ Qty: _____	SIS#
Model #: _____	

GWS66

The GWS66 includes:

- GW24 glasswasher with 01001500 Slide-out Chemical Bottle Rack
- SWB-18-DW wet waste sink cabinet with 03005491 trash receptacle
- DBGR-24-RS drainboard glassrack with roll-out shelves

Glastender, Inc. • 5400 North Michigan Road • Saginaw, MI • 48604-9780
989.752.4275 • 800.748.0423 • Fax 989.752.4444
www.glastender.com

Approval/Notes:

Specifications subject to change without notice. For current specifications please visit our website.

SWB-18-DW as part of the GWS66 glasswashing station

For more detailed specifications, see Spec Sheet Wet Waste Sink Cabinets 3.21

SWB-18-DW

03005491
Trash Receptacle

Standard Features

- Manufactured with total welded construction to meet NSF® standards
- All stainless steel construction
- Adjustable stainless steel bullet feet
- 9-1/4" by 11-1/2" by 6" deep sink bowl with hot and cold water gooseneck faucet
- Faucets are standard and ship mounted
- Lift-out perforated plastic wet waste strainer
- Cabinet base with work surface trash chute hole and front hinged access door with lock. Accessory part #03005491 28-1/2 quart trash receptacle is included with the GWS66 glasswashing station.

Specifications

Drain
- 1-1/2" I.P.S. Threaded drain will fit Dearborn part #8033 slipnut and part #W-573P washer.

Faucet
- Deck mount on 4" centers, accepts 3/8" sink leads, hot and cold water connections required

Sink Bowl Dimensions
- 9-1/4" by 11-1/2" by 6" deep

Sink Strainer
- Perforated plastic

Legs
- 1-5/8" diameter, 16 gauge stainless steel
- Stainless steel bullet feet

Materials
- 20 gauge stainless steel parts include: all components unless otherwise noted
- 18 gauge stainless steel parts include: leg pads

Dimensional Information

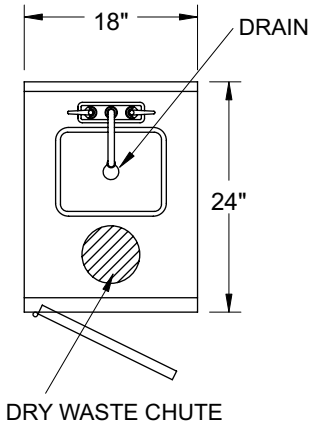

PLAN VIEW

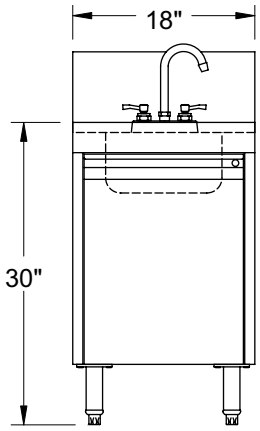

FRONT ELEVATION

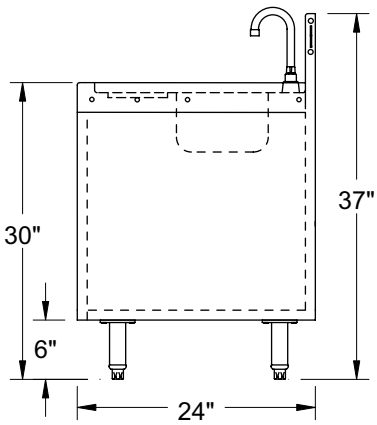

SIDE ELEVATION

Glastender®
5400 North Michigan Road • Saginaw, MI • 48604-9780
989.752.4275 • 800.748.0423 • Fax 989.752.4444
www.glastender.com

Printed in USA

GW24 Rotary Glasswasher as part of the GWS66 glasswashing station

Specifications

General Plumbing [Hot water and cold water required]
- Plumb with 1/2" water supply. Adapt to 3/8" FMPT.
- Minimum water pressure is 25 PSI
- Maximum water pressure is 100 PSI. Install water pressure regulator if line pressure is over 100 PSI. Water valve on unit has built-in strainer and flow control to provide consistent volume between 25 and 100 PSI
- Install separate water shut-off valve
- Unit has built-in air gap - vacuum breaker is not required
- Consumption is 3 gallons per cycle

Hot Water Supply
- Maximum temperature is 150ºF (66ºC)
- Minimum temperature is 130ºF (54ºC)

Cold Water Supply
- No minimum temperature requirement

GW24 with 01001500 Slide-out chemical rack

For more detailed specifications, see Spec GW24 1.12

Drain
- 1-1/2" tailpiece.
- Use open type floor drain for maximum drainage

Electrical
- 120V, single phase, 60Hz, 6-foot NEMA 5-15P grounded cord included
- Dedicated 15 amp circuit recommended
- Power requirements - 3.5 amps

5-15P

Detergent
- Extra heavy duty, non-foaming, commercial liquid dishwashing detergent is required - .30% concentration
- Consult local chemical supplier to match detergent with local water conditions

Sanitizer
- Liquid chlorine bleach (sodium hypochlorite - 5.25% solution) adjusted to 50 ppm

Rinse Aid
- Liquid Rinse Aid adjusted for proper sheeting

Operation / Capacity
- 120°F (49ºC) minimum wash temp and rinse temp adjustable down to 75°F (24ºC)
- 2 minute 15 second cycle
- 2-3/4" diameter bar glasses - 41 per cycle
- 2-1/2" diameter bar glasses - 49 per cycle
- Maximum glass height 10"

Dimensional Information

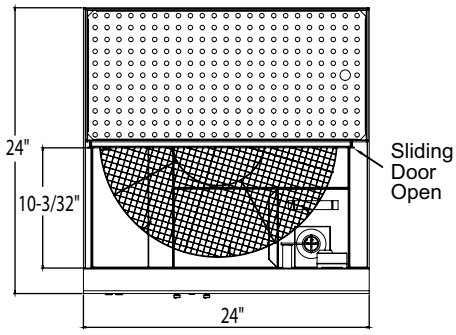

PLAN VIEW

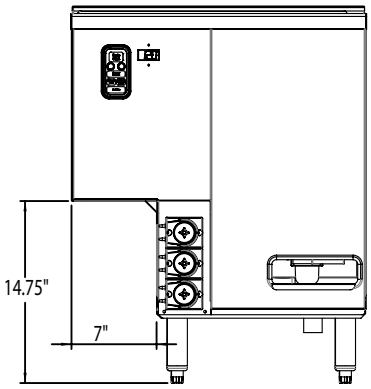

FRONT VIEW

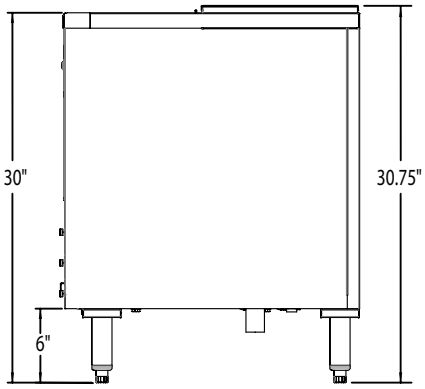

SIDE VIEW

Mechanicals

Note: 1. In all cases, consult local plumbing, electrical and health codes for regulations which may not be consistent with the information on the front of this specification sheet
2. The utility connections are made from the floor at the bottom of the unit approximately 7" to 8" high.
3. The Glastender policy of constant quality improvement means specifications are subject to change without notice.

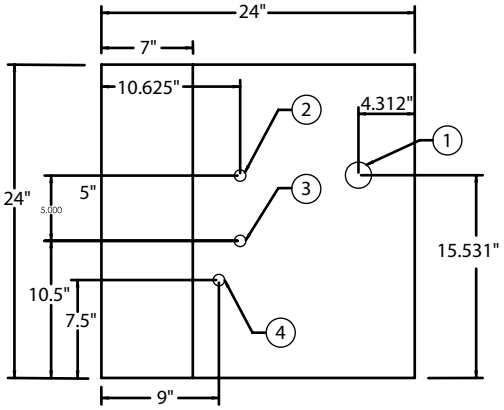

① = DRAIN
② = HOT WATER
③ = COLD WATER
④ = ELECTRICAL

Glastender®
5400 North Michigan Road • Saginaw, MI • 48604-9780
989.752.4275 • 800.748.0423 • Fax 989.752.4444
www.glastender.com

Printed in USA

DBGR-24-RS as part of the GWS66 glasswashing station

For more detailed specifications, see Spec Drainboard Glassracks 3.15

DBGR-24-RS
(Glassrack not included)

Standard Features

- All stainless steel construction
- Adjustable stainless steel bullet feet
- One piece, seamless top and backsplash featuring 1/4" radius corners for easy cleaning
- Roll-out bottom shelf and one roll-out intermediate shelf (intermediate shelf is not adjustable)
- Solid shelves are also useable for non-glassrack storage
- Exclusive design drainboard top with drain pan and separate perforated insert for better air circulation
- Intermediate shelf and floor are still removable after unit is plumbed and include radius corners for easy cleaning
- Smooth interior walls for easy cleaning & finished appearance

Specifications

Drain

- 1/2" welded tailpiece. Clear vinyl drain line is connected to the tailpiece at the factory. A 1/2" by 1/2" barbed plastic elbow is provided to make the connection at the bottom of the unit.

Legs

- 1-5/8" diameter, 16 gauge stainless steel
- Stainless steel bullet feet

Materials

- 20 gauge stainless steel parts include: all components unless otherwise noted
- 18 gauge stainless steel parts include: leg pads

Dimensional Information

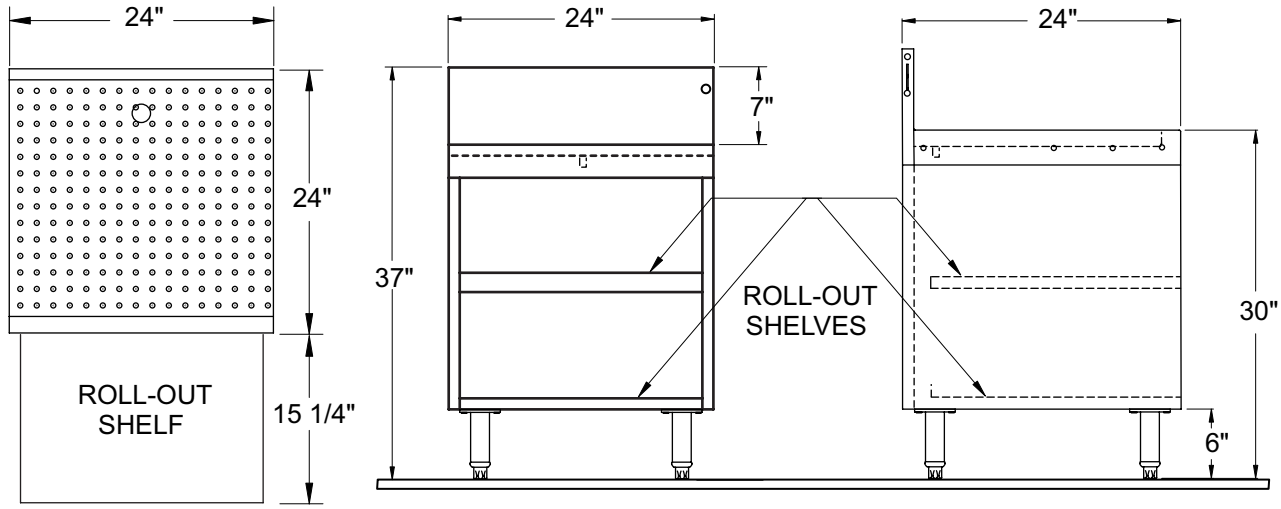

PLAN VIEW FRONT ELEVATION SIDE ELEVATION

Glastender®
5400 North Michigan Road • Saginaw, MI • 48604-9780
989.752.4275 • 800.748.0423 • Fax 989.752.4444
www.glastender.com

Printed in USA